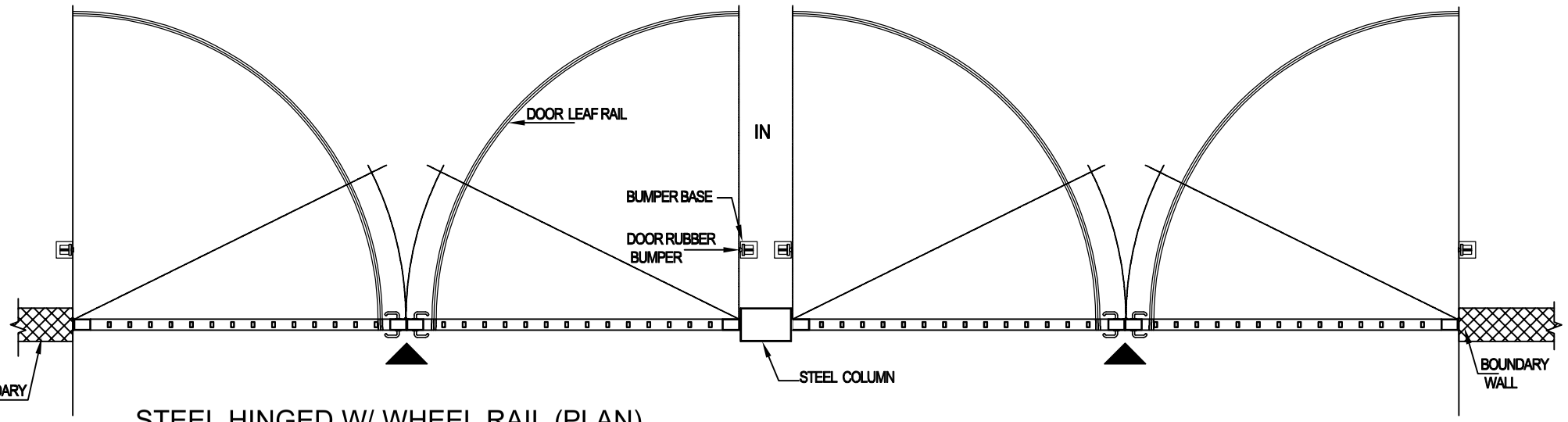

STEEL HINGED W/ WHEEL RAIL (PLAN)

SCALE: 1/50

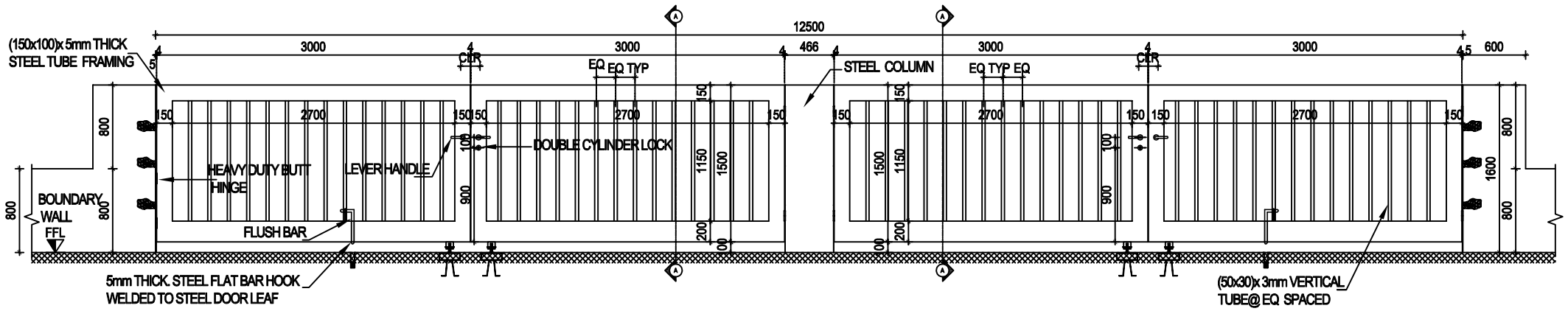

STEEL HINGED GATE W/ WHEEL RAIL (ELEVATION)

SCALE: 1/50

KEY PLAN

Rev	Description	Drawn	Checked	Authorised

Purpose of issue	Rev	Date	Authorised

PLOT NO.	
BASIN NO.	
LOCATION :	

desinged By :

PROJECTS DIVISION
LAND TRANSPORT TERMINALS DEPARTMENT
LTRC

Project:

BUS TERMINAL REHABILITATION PROJECT / KARAK

Drawing title:

Main Steel Gate Detail

Design	قسم المشاريع- مرافق النقل
Checked	
Drawn	
Original Scale	Date: 16-11-2023
Size	A3
Drawing Number	A06
Rev	0

D. TYPE	G03	W. TYPE	W01	W. TYPE	W02	W. TYPE	W03	W. TYPE	W04
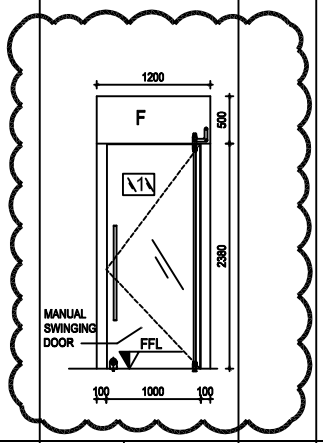		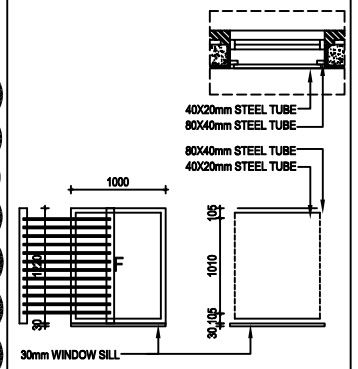		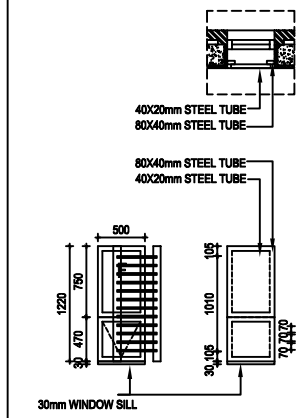		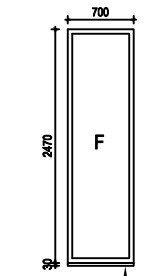		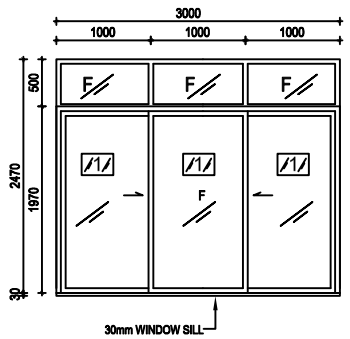	
WIDTH	1000 SCALE 1:50	WIDTH	1000 SCALE 1:50	WIDTH	500 SCALE 1:50	WIDTH	700 SCALE 1:50	WIDTH	3000 SCALE 1:50
HEIGHT	2380	HEIGHT	1220	HEIGHT	1220	HEIGHT	2470	HEIGHT	2470
REMARKS	DOUBLE GLAZED	REMARKS	DOUBLE GLAZED WINDOW	REMARKS	SINGLE GLAZED WINDOW (FROSTED)	REMARKS	DOUBLE GLAZED WINDOW	REMARKS	DOUBLE GLAZED WINDOW

W. TYPE	W05	W. TYPE	W06	W. TYPE	W07	W. TYPE	W08
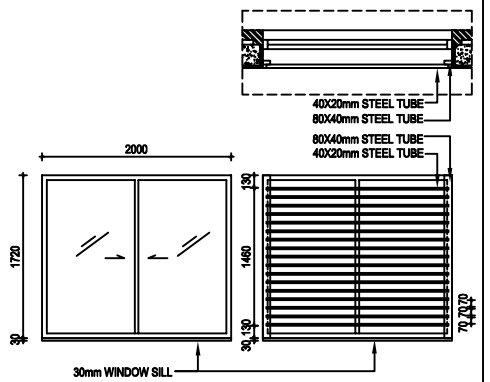		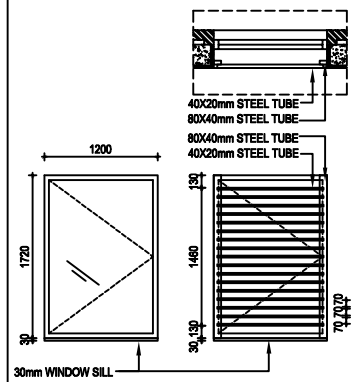		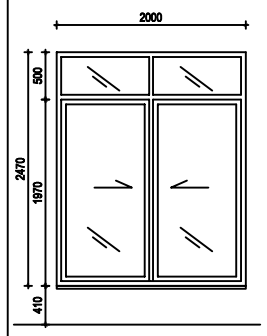		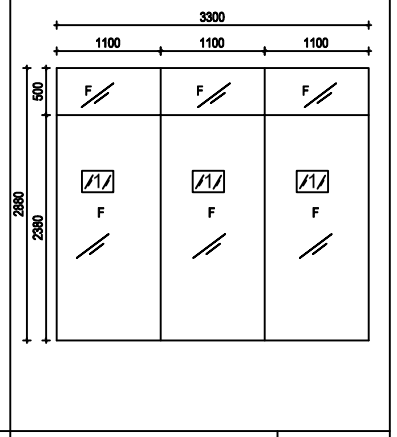	
WIDTH	2000 SCALE 1:50	WIDTH	1200 SCALE 1:50	WIDTH	2000 SCALE 1:50	WIDTH	3300 SCALE 1:50
HEIGHT	1720	HEIGHT	1720	HEIGHT	2470	HEIGHT	2880
REMARKS	DOUBLE GLAZED WINDOW	REMARKS	DOUBLE GLAZED WINDOW	REMARKS	DOUBLE GLAZED WINDOW	REMARKS	DOUBLE GLAZED WINDOW

W. TYPE	OP1	W. TYPE	OP2	T. TYPE	SH 1	T. TYPE	SH 2
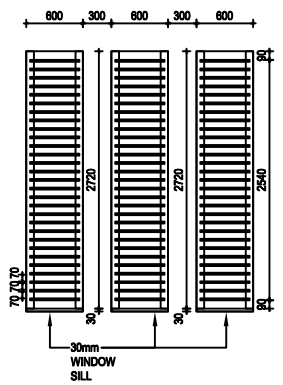		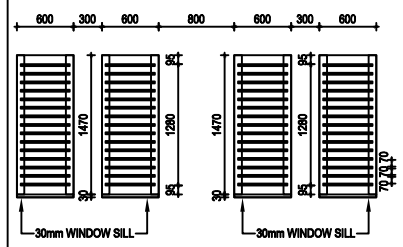		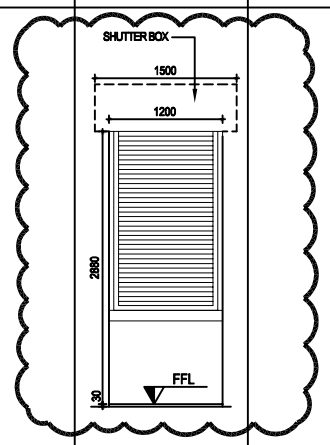		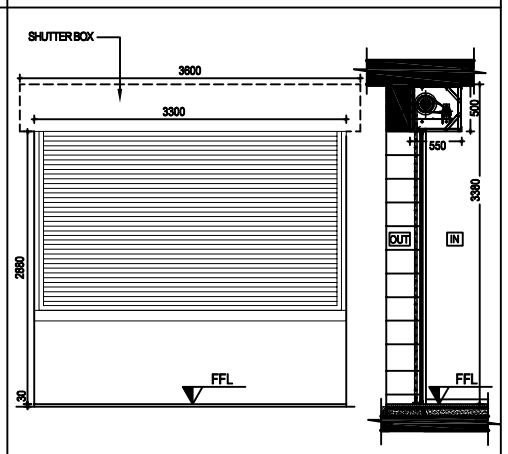	
WIDTH	600 SCALE 1:50	WIDTH	600 SCALE 1:50	WIDTH	1200 SCALE 1:50	WIDTH	3300 SCALE 1:50
HEIGHT	2720	HEIGHT	1470	HEIGHT	2880	HEIGHT	2880
REMARKS	OPENING WITH PROTECTION RAILING (WITHOUT GLASS)	REMARKS	OPENING WITH PROTECTION RAILING (WITHOUT GLASS)	REMARKS	ROLLING SHUTTER	REMARKS	ROLLING SHUTTER

/1/ DOUBLE GLAZING WITH FOLLOWING COMPOSITION:
- 6mm THICK CLEAR TEMPERED GLASS
- OUTER PANEL 12mm AIR SPACE
- 6mm THICK CLEAR TEMPERED GLASS
- INTERNAL PANEL

F FIXED PANEL
DOUBLE GLAZING WITH FOLLOWING COMPOSITION:
6mm THICK CLEAR TEMPERED GLASS
OUTER PANEL 12mm AIR SPACE
6mm THICK CLEAR TEMPERED GLASS
INTERNAL PANEL

KEY PLAN

Rev	Description	Drawn	Checked	Authorised

Purpose of issue	Rev	Date	Authorised

PLOT NO.	
BASIN NO.	
LOCATION :	

desinged By :

PROJECTS DIVISION
LAND TRANSPORT
TERMINALS DEPARTMENT
LTRC

Project:

BUS TERMINAL REHABILITATION PROJECT / KARAK

Drawing title:

Rolling Shutter & windows detail

Design	قسم المشاريع- مرافق النقل	
Checked		
Drawn		
Original Scale	Date: 16-11-2023	Size A3
Drawing Number A07		Rev 0